ICRF 46

Centrotherm
solutions beyond

InnoFlue® Vent Systems

Mounting instructions for Concentric Roof Termination (4"/6")

For use with InnoFlue® Concentric Roof Termination (ICRT) and Vents (ICVL) and Accessories

Concentric Roof Flashing

Contents

ICRF

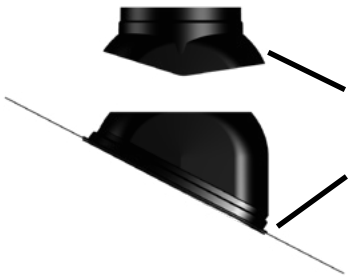

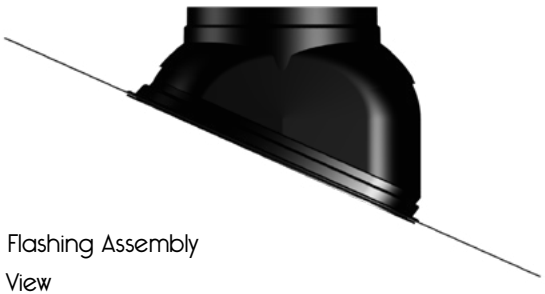

Roof Flashing Assembly
Side View

Installation

1. Center flashing over roof penetration and affix to roof.

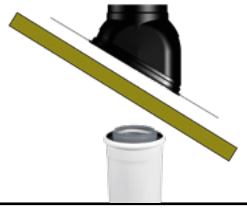

2. Adjust cap to correct pitch and insert ICRT

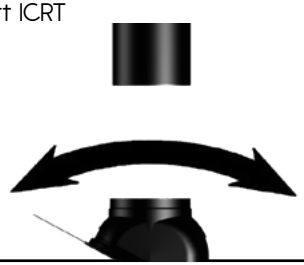

3. Insert ICRT through ICFR, stopping at ICRT's integrated rain collar, and into ICVL

Note: ICRF will only work for roofs pitched between 25° and 55°

Completed Installation

ICRT

Side View

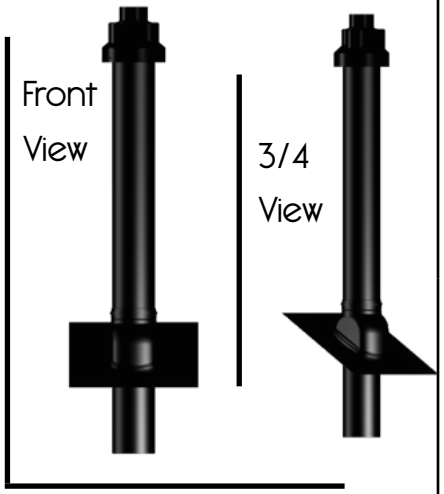

Front View

3/4 View

ICRT Integrated rain collar

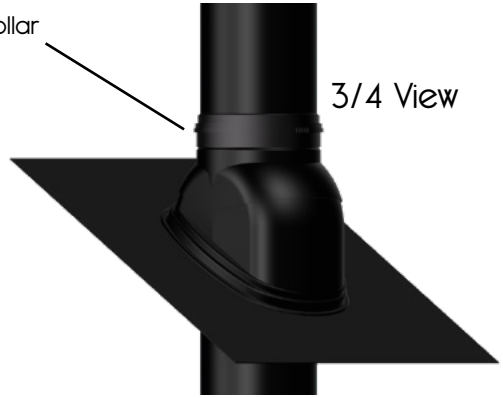

3/4 View