Centrotherm
solutions beyond

InnoFlue®

Mounting instructions for kit | Concentric Roof Termination

ICRT SERIES

CONCENTRIC

Kit Contents

Concentric Roof Termination

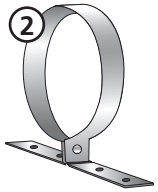

Termination Support Clamp

Roof Flashing sold separately. Ask your supplier about available options.

Installation

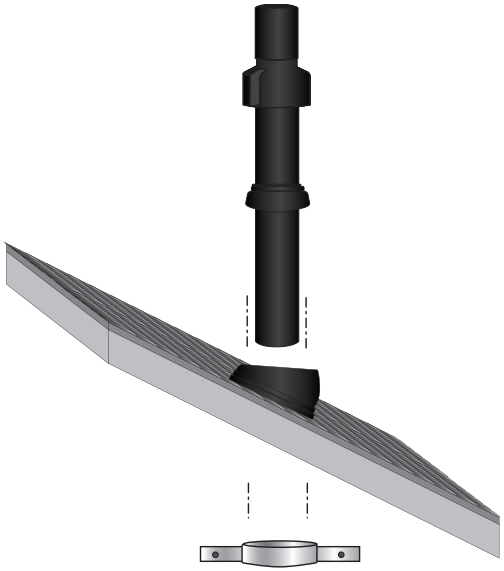

Installation

1
- Locate terminator per local code.
- Mark Position on roof.
- Use hole saw to cut hole in roof.

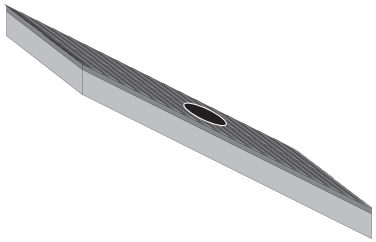

2 Install Roof Flashing (manufactured by others).

Slide Concentric Roof Termination (1) through roof from exterior.

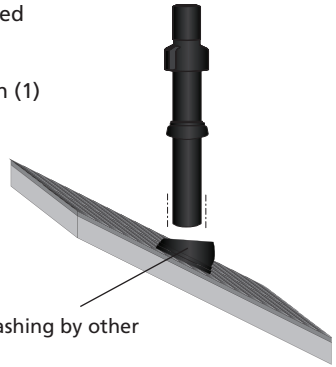

3 Attach Termination Support Clamp (2) to Termination. Tighten clamp around Termination. Screw mounting bracket to wall or roof joist.

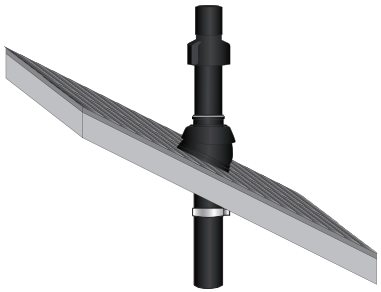

4 Caulk space between Termination and flashing.
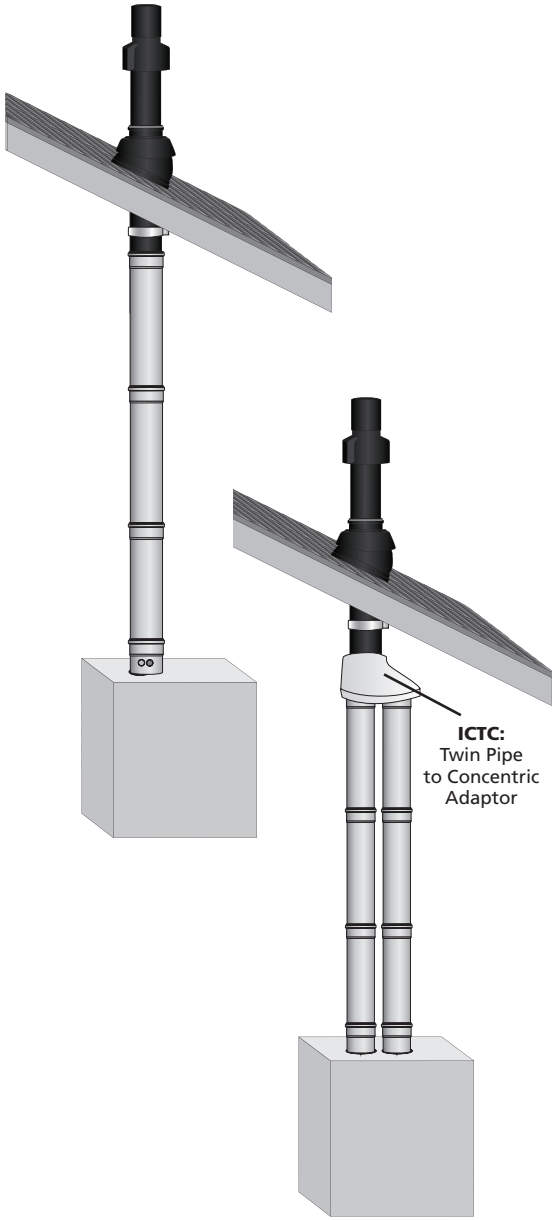
5 Attach separate Twin Pipe to Concentric Adaptor (ICTC) to convert to twin pipe or follow concentric installation instructions for remainder of installation.